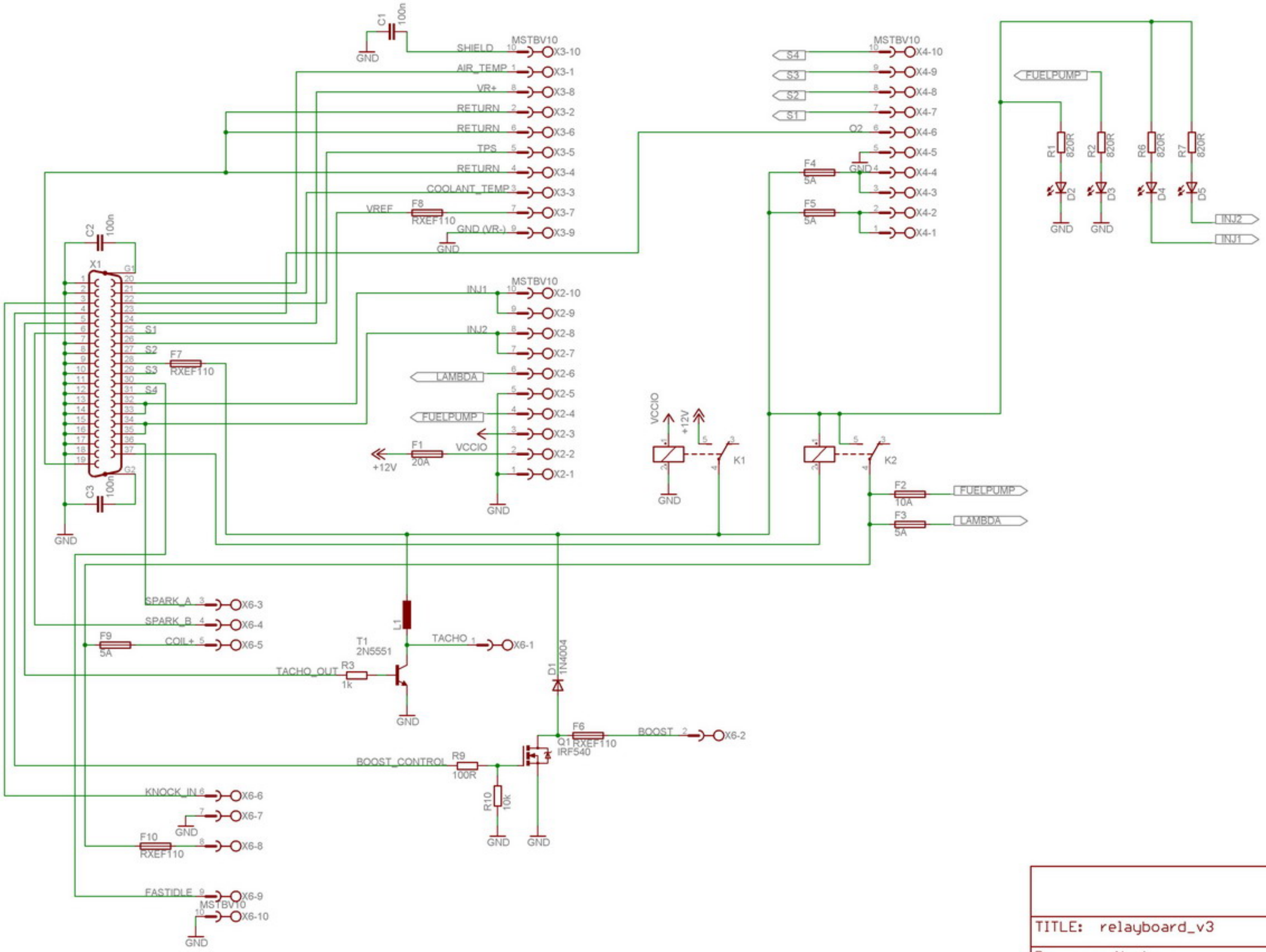

TITLE: relayboard_v3	
Document Number:	REV:
Date: 16.03.2008 12:27:12	Sheet: 1/1